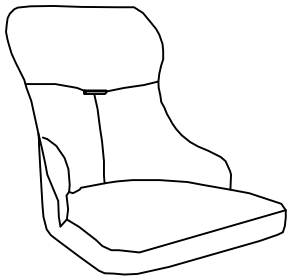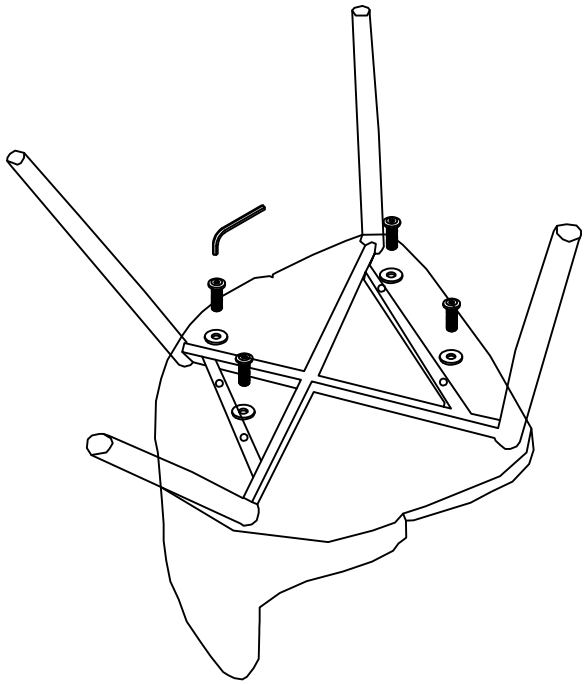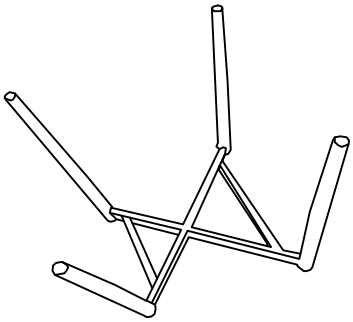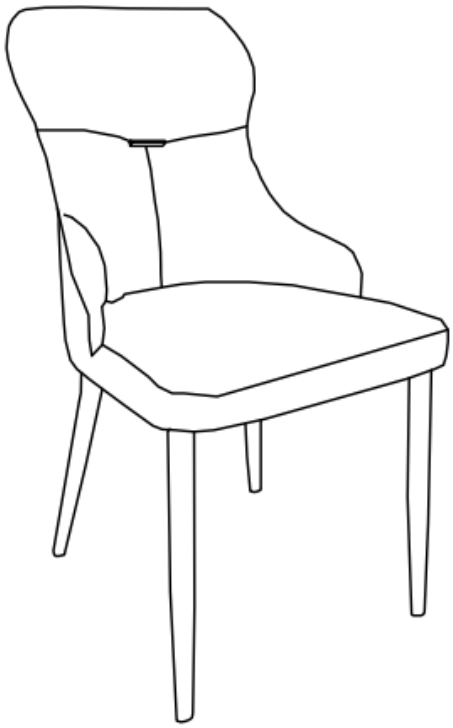A		B		C					
	4 PCS		4 PCS		1 PCS