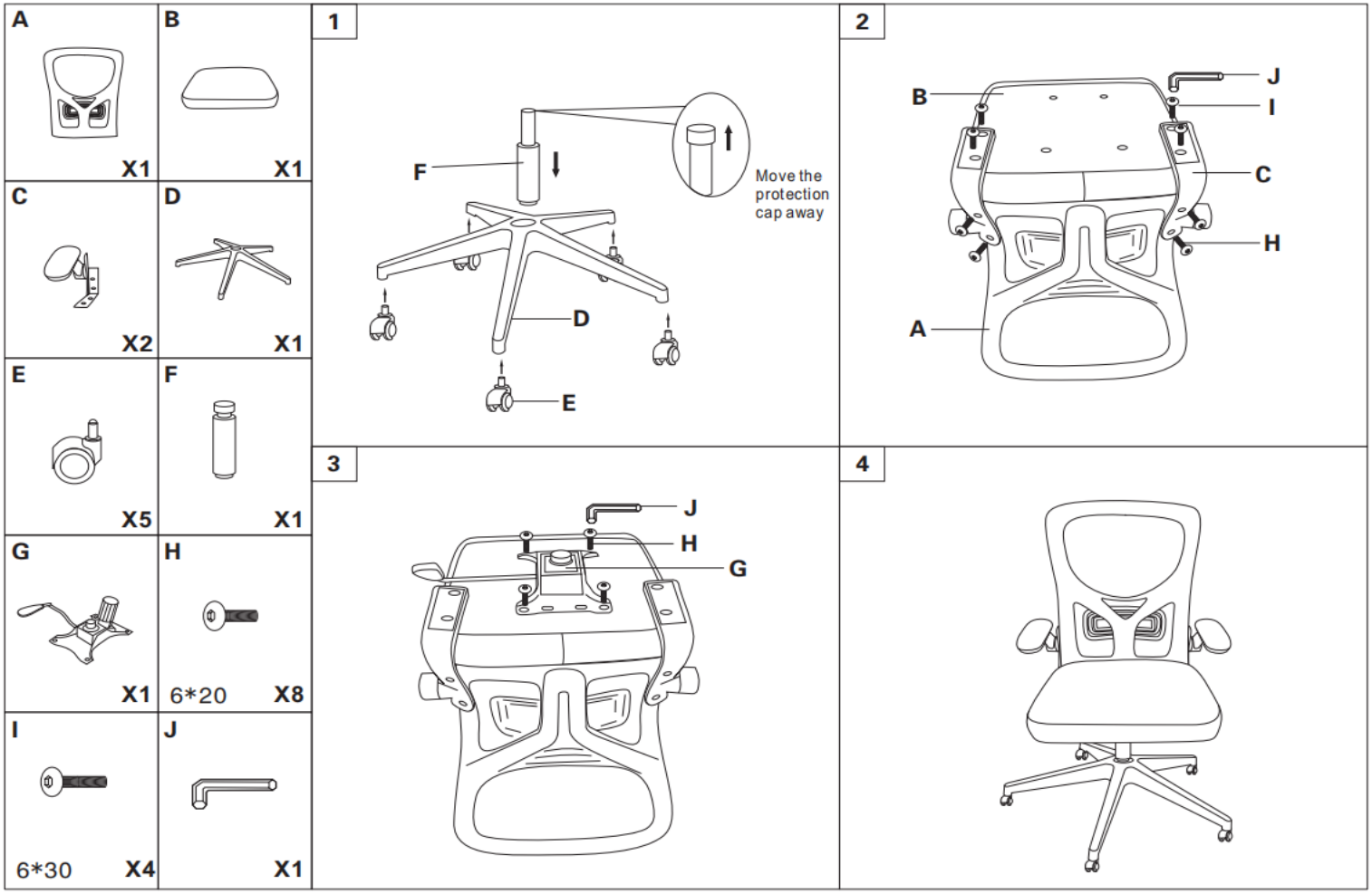
A
X1
B
X1
C
X2
D
X1
E
X5
F
X1
G
X1
H
6*20
X8
I
6*30
X4
J
X1
1
F
D
E
Move the protection cap away
2
B
J
I
C
H
A
3
J
H
G
4